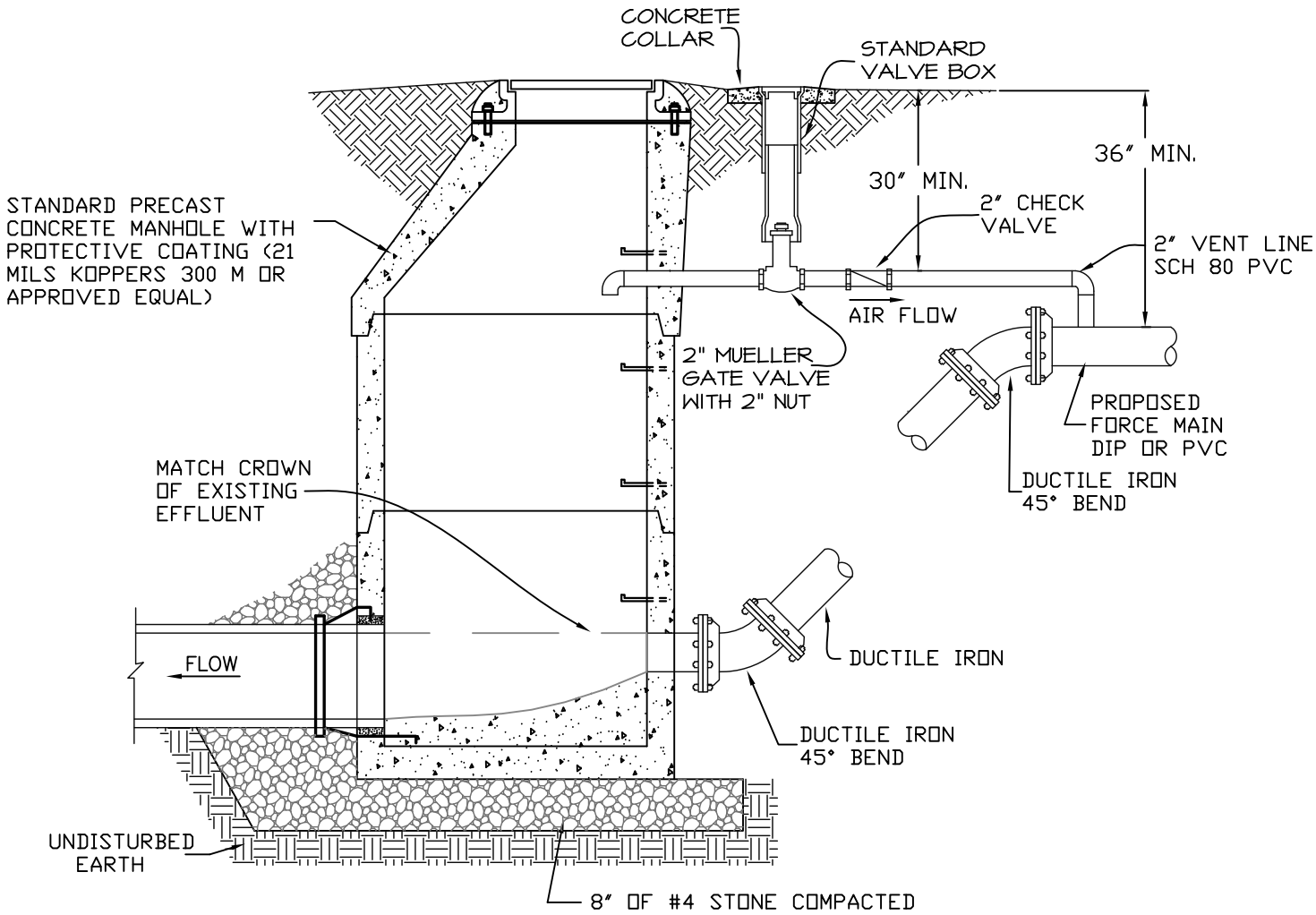

KANNAPOLIS PUBLIC WORKS

MANHOLE FORCEMAIN CONNECTION

DATE: 06 JAN 09

S-MH-01