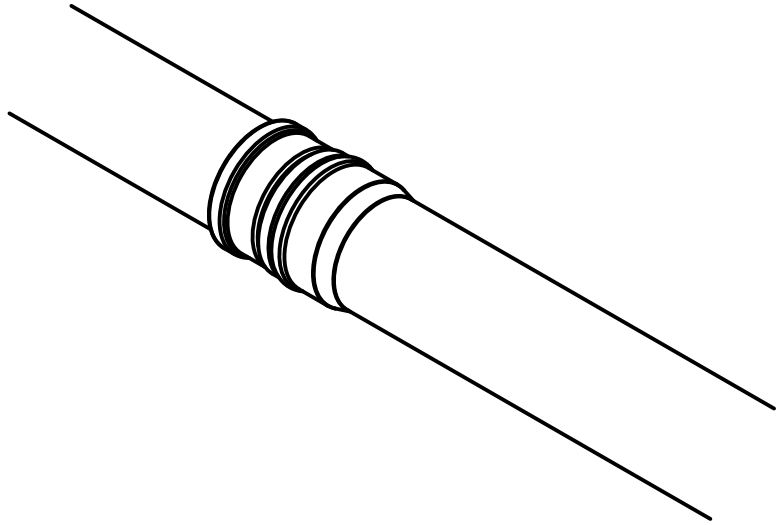

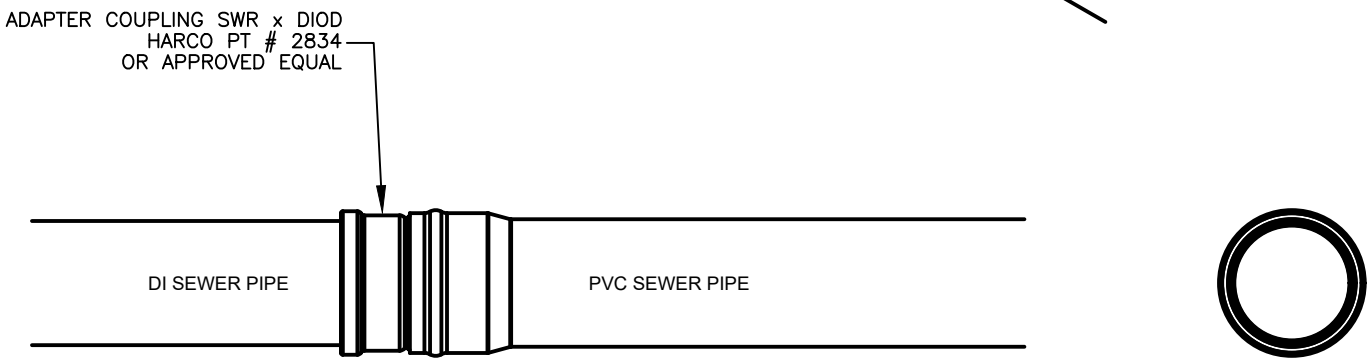

NOT TO SCALE

KANNAPOLIS Engineering

PIPE ADAPTER DIP TO PVC

SEPTEMBER 2022

342