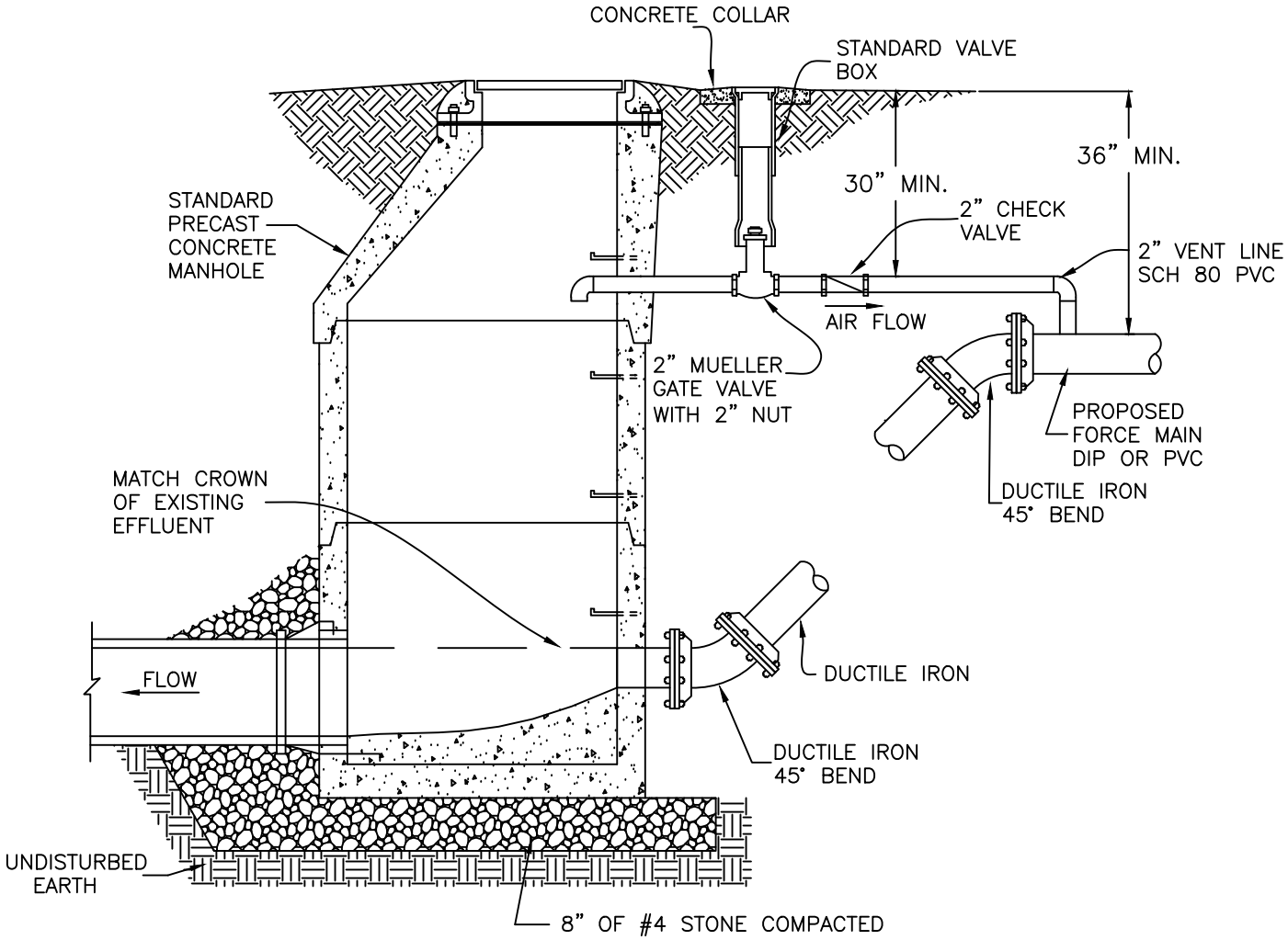

NOT TO SCALE

KANNAPOLIS Engineering

MANHOLE FORCEMAIN CONNECTION

SEPTEMBER 2022

340