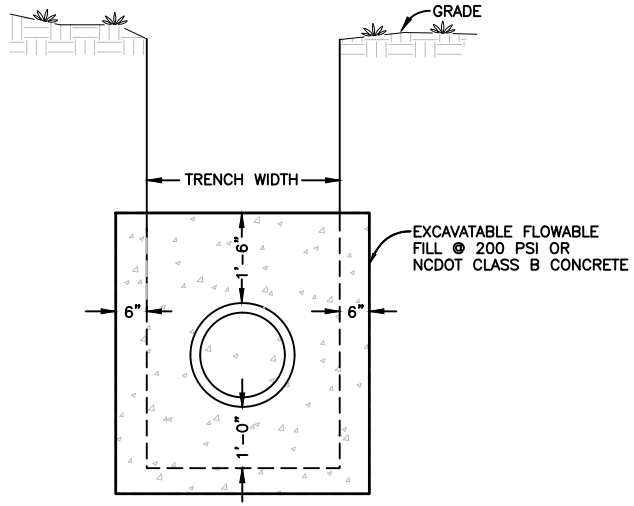

SECTION

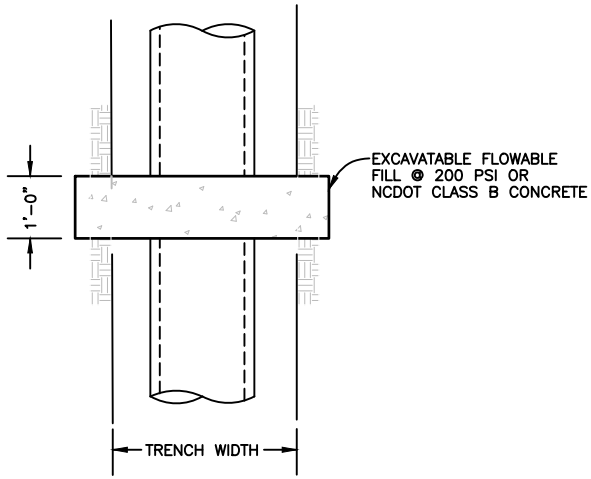

PLAN

NOT TO SCALE

KANNAPOLIS Engineering

ANTI-SEEP COLLAR

SEPTEMBER 2022

308