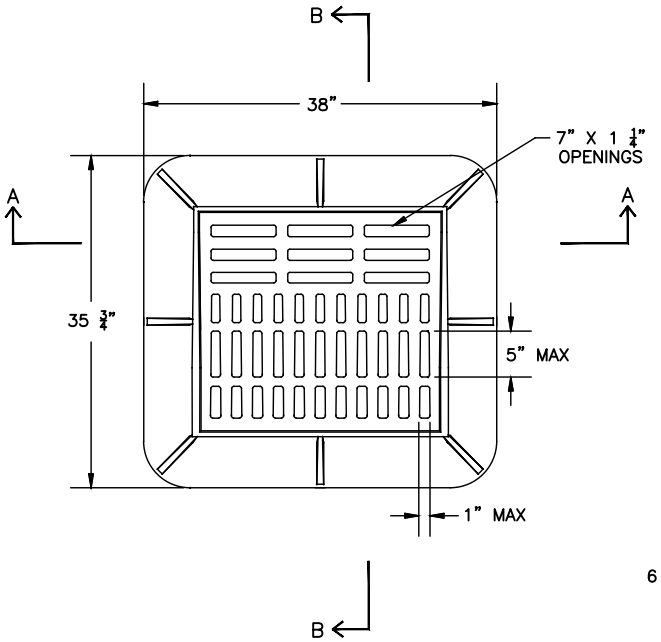

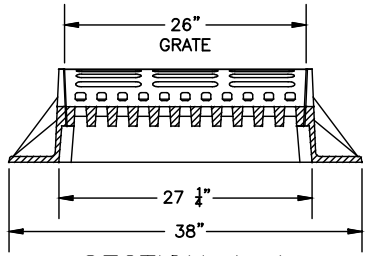

SECTION A–A

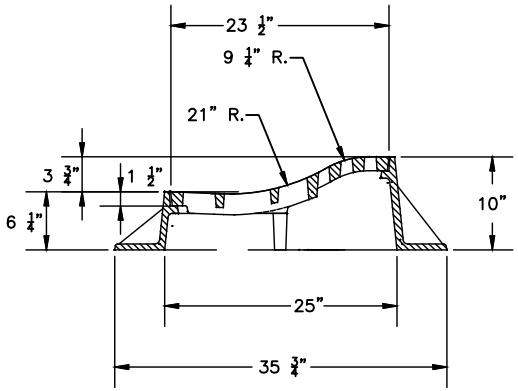

SECTION B–B

USE OF DETAIL REQUIRES PRIOR AUTHORIZATION FROM THE CITY

NOT TO SCALE

KANNAPOLIS Engineering

Valley Gutter Frame & Grate

SEPTEMBER 2022

126A