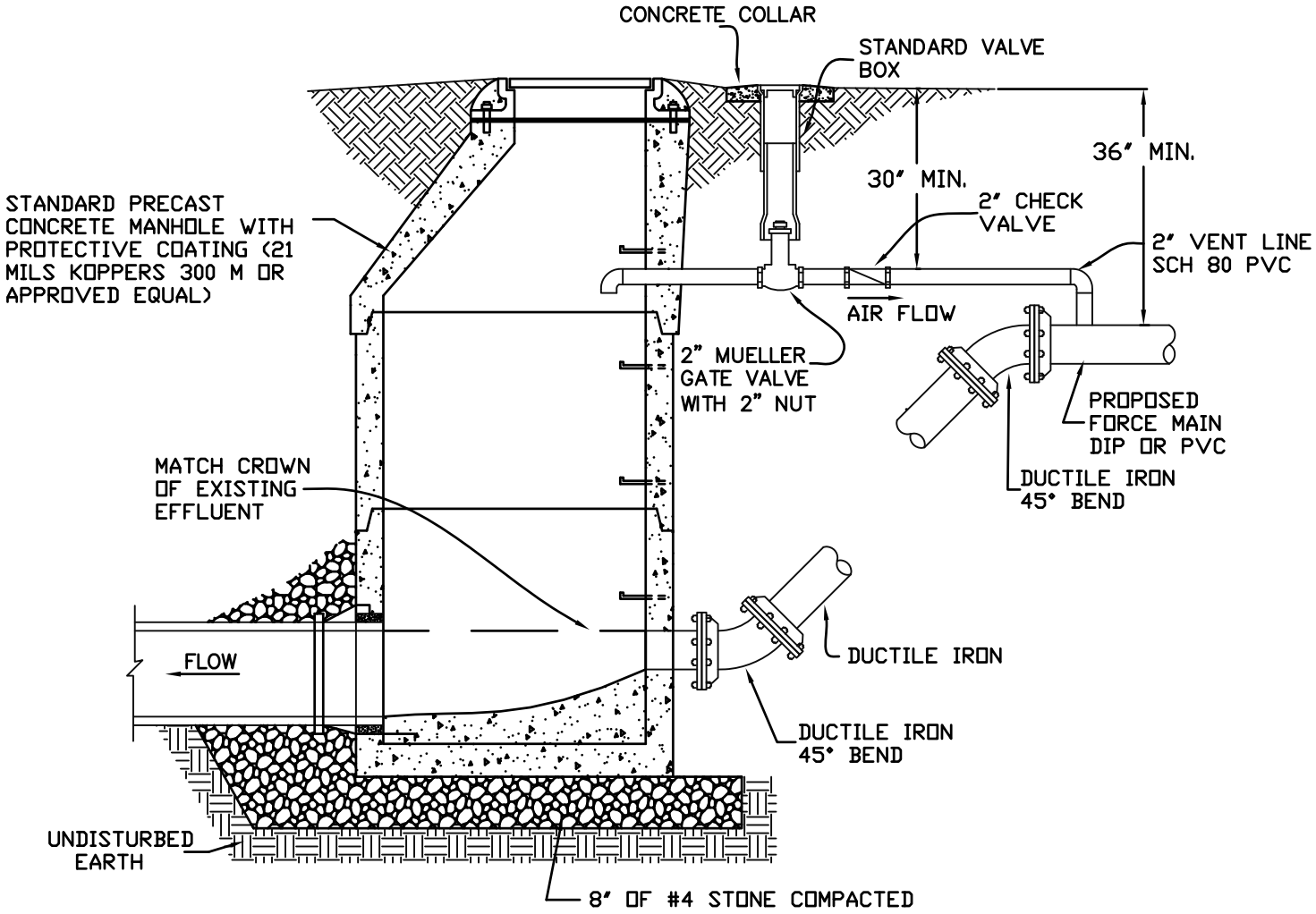

KANNAPOLIS Public Works

MANHOLE
FORCEMAIN CONNECTION

DATE: JULY 9, 2015

S-MH-01